User Guide

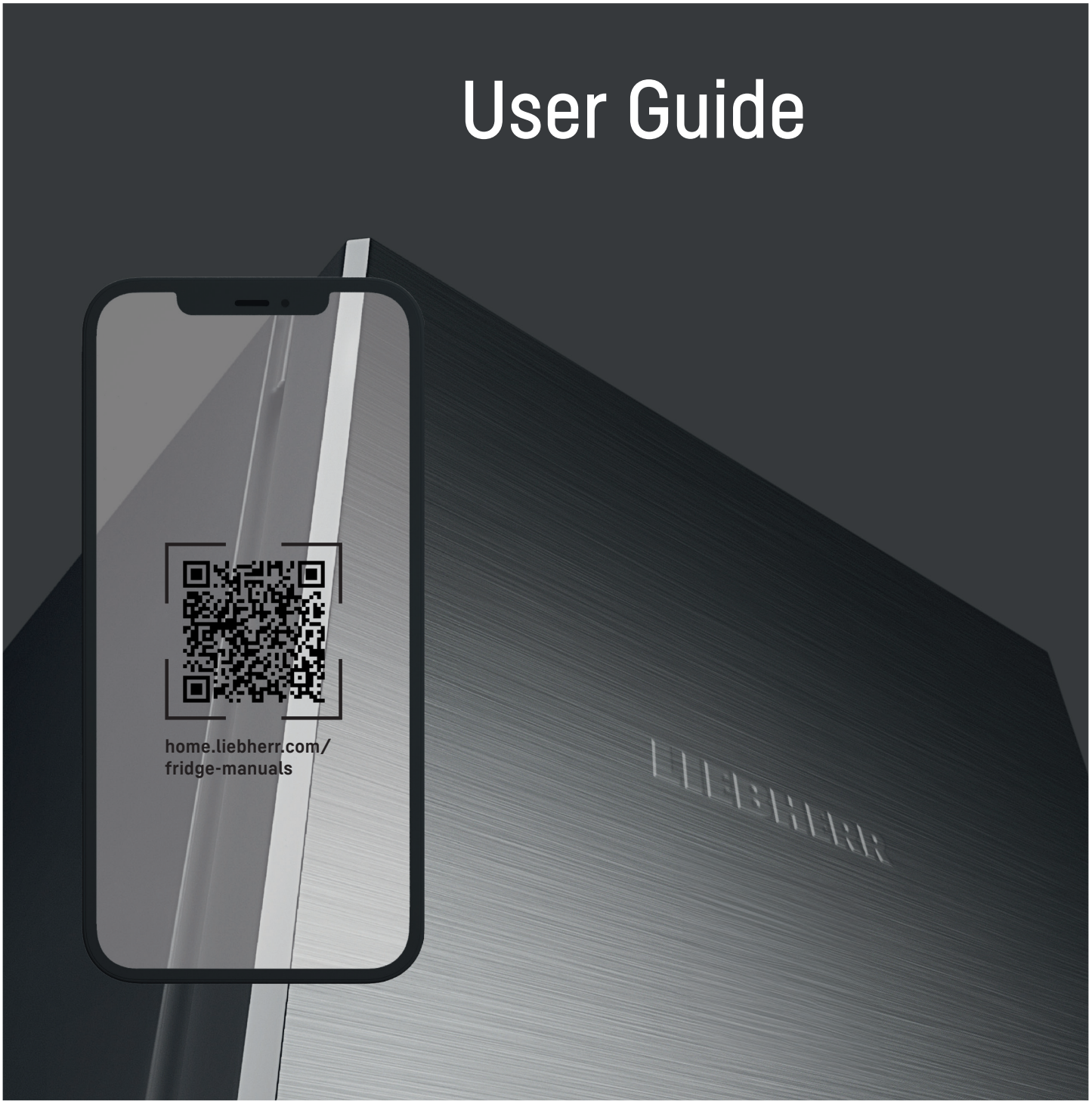

EN ORIGINAL OPERATOR'S MANUAL

LIEBHERR

Contents

1 Safety information and warnings ... 2
1.1 Cleaning ... 3
1.2 Disposal ... 4
1.3 Conformity ... 4
1.4 Sound emission of the appliance ... 4
1.5 SVHC substances in accordance with the REACH Regulation ... 4
1.6 EPREL database ... 4
1.7 Open source licences ... 4
1.8 Spare parts ... 4

2 Appliance at a glance ... 4
2.1 Scope of supply ... 4
2.2 Overview of appliances and equipment ... 4
2.3 Special features ... 5
2.4 Range of use of appliance ... 5

3 Setting up and connecting ... 5
3.1 Installation requirements ... 5
3.2 Appliance dimensions ... 6
3.3 Transporting the appliance ... 6
3.4 Unpacking appliance ... 7
3.5 Removing the transport lock ... 7
3.6 Reversing the door hinge ... 7
3.7 Aligning the door ... 14
3.8 Installing appliance ... 14
3.9 Setting up the appliance so it is level ... 14
3.10 Installing multiple appliances ... 15
3.11 After installation ... 15
3.12 Disposing of packaging ... 15
3.13 Connecting the appliance to the power supply ... 15

4 Putting into operation ... 16
4.1 Switching on appliance ... 16

5 Storage ... 16
5.1 Information regarding storage ... 16
5.2 Storage times ... 16

6 Controls ... 16
6.1 Control and display elements ... 16
6.2 Appliance functions ... 16
6.2.1 Temperature ... 16
6.2.2 Lighting ... 17

7 Features ... 17
7.1 Safety lock ... 17

8 Maintenance ... 18
8.1 Defrosting appliance ... 18
8.2 Cleaning the appliance ... 18

9 Customer help ... 19
9.1 Technical specifications ... 19
9.2 Technical fault ... 19
9.3 Customer Service ... 20
9.4 Type plate ... 20

10 Shutting down ... 20

11 Disposal ... 20
11.1 Preparing appliance for disposal ... 20
11.2 Disposing of the appliance in an environmentally friendly manner ... 20

12 Additional information ... 21

The manufacturer is continually working on the further development of all types and models. Please be aware that we reserve the right to make changes to the shape, equipment and technology.

Symbol	Explanation
	Read instructions Please read the information in these instructions carefully to understand all of the benefits of your new appliance.
	Additional information on the Internet The digital manual with additional information and in other languages can be found via the QR code on the front of the manual or by entering the service number at **home.liebherr.com/fridge-manuals**. The service number can be found on the serial tag: 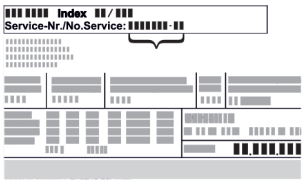 *Fig.* Example illustration
	Check appliance Check all parts for transport damage. If you have any complaints, please contact your agent or customer service.
	Differences These instructions apply to a range of models, so differences are possible. Sections that apply to certain models only are marked with an asterisk (*).
	Instructions and results Instructions are marked with a ▶. Results are marked with a ▷.
	Videos Videos about the appliances are available on the YouTube channels of Liebherr-Hausgeräte.

This user information applies to the following appliances:

MRFvd 3501	MRFvd 3511
MRFvd 4001	MRFvd 4011
MRFvd 5501	MRFvd 5511

1 Safety information and warnings

Please keep these operating instructions in a safe place so you can refer back to them at any time.

If you pass the appliance on, please hand these operating instructions to the next user.

Read these operating instructions carefully before use to ensure safe and correct use of the appliance. Follow the instructions, safety instructions and warning messages included at all times. They are important for ensuring you can operate and install the appliance safely and without any problems.

Danger for the user:

- This device can be used by children aged 8 and above and people with impaired physical, sensory or mental abilities or with a lack of experience and knowledge provided that they are supervised or have received instruction in the safe use of this appliance, and about the resulting hazards. Children must not play with this

*** Depending on model and options**

appliance. Cleaning and user maintenance work must not be carried out by children without adult supervision.
- The socket must be easily accessible so that the appliance can be disconnected quickly from the electricity supply in an emergency. It must not be located in the area behind the appliance.
- When disconnecting the appliance from the supply, always take hold of the plug. Do not pull the cable.
- In the event of a fault pull out the mains plug or deactivate the fuse.
- **WARNING:** Do not damage the mains power cable. Do not operate the appliance with a defective mains power cable.
- **WARNING:** Multiple sockets/distributors and other electronic equipment (such as halogen transformers) must not be placed or operated at the rear of the appliance.
- **WARNING:** Keep ventilation openings, in the appliance enclosure or in the built-in structure, clear of obstruction.
- Repairs, interventions on the appliance and the replacement of mains connection line may only be carried out by AfterSales Service or other suitably trained specialist personnel.
- Only assemble, connect and dispose of the appliance according to the instructions.

Fire hazard

- The coolant used (information on the model plate) is ecofriendly but also flammable Any leaking coolant may ignite.
  - **WARNING:** Do not damage refrigeration circuit.
  - Do not handle ignition sources inside the appliance.
  - **WARNING:** Do not use electrical appliances in the fridge compartment which do not comply with the design recommended by the manufacturer.
  - If the refrigerant leaks: remove any naked flames or ignition sources from the vicinity of the leakage point. Properly air the room. Inform customer services.
- Do not operate the appliance close to explosive gases.
- Do not store or use petrol or other flammable gases and liquids close to the appliance.
- Do not store any explosive substances, such as aerosol containers with flammable propellant gas, in the appliance. To identify these spray cans, look for the list of contents printed on the can, or a flame symbol. Gases possibly escaping may ignite due to electrical components.
- Keep burning candles, lamps and other items with naked flames away from the appliance so that they do not set the appliance on fire.
- Please be sure to store alcoholic drinks or other packaging containing alcohol in tightly closed containers. Any alcohol that leaks out may be ignited by electrical components.

Danger of tipping and falling:

- Do not misuse the plinth, drawers, doors etc. as a step or for support.

Danger of frostbite, numbness and pain:

- Avoid prolonged skin contact with cold surfaces or refrigerated/frozen goods or take protective measures, e.g. wear gloves.

Danger of injury and damage:

- **WARNING:** Do not use mechanical equipment or other methods to speed up the defrosting process other than those recommended by the manufacturer.
- **WARNING:** Risk of injury due to electric shock! There are live electrical parts under the cover.
  Only have the LED interior lighting replaced or repaired by customer service or other suitably trained professionals.
- **NOTICE:** Appliance must only be used using original manufacturer accessories or using accessories from other providers approved by the manufacturer. The user bears the risk of using accessories which are not approved.

Risk of crushing

- Do not hold the hinge when opening and closing the door. Fingers may get caught.

Specialist personnel qualifications:

Specialist personnel are persons who, on account of their specialist training, knowledge and experience as well as their knowledge of the relevant standards, are able to assess and perform the work assigned to them and identify potential hazards. They must have training, instruction, and authorisation to work on the appliance.

Symbols on the appliance:

This symbol may be located on the compressor. It relates to the oil in the compressor and makes reference to the risk that:**Swallowing or inhaling can be fatal.** This advice is only relevant to recycling. There is no danger in normal operation.

WARNING: Danger of fire / flammable materials. This symbol is located on the compressor and indicates the danger of flammable materials. Do not remove the sticker.

This or a similar sticker may be located on the rear of the appliance. This sticker indicates that there are vacuum insulation panels (VIP) or perlite panels in the door and/or housing. This advice is only relevant to recycling. Do not remove the sticker.

This symbol is located on the type plate. It indicates that the appliance contains valuable materials and that you must not dispose of it with household waste.

(see 1.2 Disposal)

Please note the warning messages and other specific advice in the other chapters:

	DANGER	Indicates an immediately hazardous situation which will lead to death or serious injuries if it is not avoided.
	WARNING	Indicates a hazardous situation which will lead to death or serious injuries if it is not avoided.
	CAUTION	Indicates a hazardous situation which will lead to minor or moderate injuries if it is not avoided.
	NOTICE	Indicates a hazardous situation which may lead to damage to property if it is not avoided.
	Note	Indicates useful instructions and tips.

1.1 Cleaning

- Regularly clean surfaces that come into contact with food.
- Clean the defrost water drain regularly.
- Do not use an electric heater or steam cleaner, naked flames or defrost spray to speed up the defrosting process.
- Do not remove the ice with sharp objects.

1.2 Disposal

- The appliance contains valuable materials and is marked with the appropriate symbol.
  - Do not dispose of the appliance in the household waste.
  - Dispose of the appliance free of charge at your local recycling centre using the Class 1 collection containers.
  - When purchasing a new appliance, return the old appliance to the retailer free of charge.
  - Provide information about return options.
- If the appliance contains lamps that you can remove yourself without damaging them:
  - Remove lamps before disposal.
  - Dispose of lamps via the appropriate collection systems.
- The appliance contains refrigerant (information on the type plate) and oil. The refrigerant inside the appliance is environmentally friendly, but flammable. The oil it contains is also flammable. Escaping refrigerant and oil can ignite in high concentrations and in contact with an external heat source.
  - Do not damage the refrigeration circuit.
  - Only dispose of the appliance in accordance with the instructions in the user information.

1.3 Conformity

The coolant circuit has been tested for leak-tightness. The appliance complies with the relevant safety regulations and directives.

EU Declaration of Conformity	
Manufacturer/Exhibitor:	LIEBHERR-HAUSGERÄTE LIENZ GMBH
Address:	A-9900 Lienz, Dr. Hans Liebherr Straße 1
The designated product complies with the provisions of the following European directives and regulations:	
(EU) 2019/2020, (EU) 2019/2024, (EU) 2019/2018, (EU) 2017/1369, 2006/42/EC, 2014/30/EU, 2009/125/EC, 2011/65/EU	
The full text of the EU Declaration of Conformity is available at the following web address: www.liebherr.com	

1.4 Sound emission of the appliance

- The A-weighted emission sound pressure level during operation of the appliance is below 70 dB(A) (sound power rel. 1 pW).

1.5 SVHC substances in accordance with the REACH Regulation

- You can use the following link to check whether your appliance contains SVHC substances in accordance with the REACH Regulation: https://go.liebherr.com/z3eewm

1.6 EPREL database

- From 1 March 2021, the information on energy labelling and eco-design requirements will be available in the European product database (EPREL). The product database can be accessed via the following link https://eprel.ec.europa.eu/. Here, you are asked to enter the model identifier. You will find the model identifier on the type plate.

1.7 Open source licences

- The appliance contains software components that use open source licences. Information on the open source licences used can be found here: home.liebherr.com/open-source-licences

1.8 Spare parts

- The spare parts availability for functional parts and stockable parts of the equipment is 15 years.

2 Appliance at a glance

2.1 Scope of supply

Check all parts for transport damage. If you have any complaints, please contact your dealer or Customer Service. (see 9.3 Customer Service)

The delivery comprises the following parts:

- Free-standing appliance
- Equipment *
- Installation materials *
- Operating instructions
- Service brochure
- Quality certificate *

2.2 Overview of appliances and equipment

MRFvd 3501	MRFvd 3511
MRFvd 4001	MRFvd 4011
MRFvd 5501	MRFvd 5511

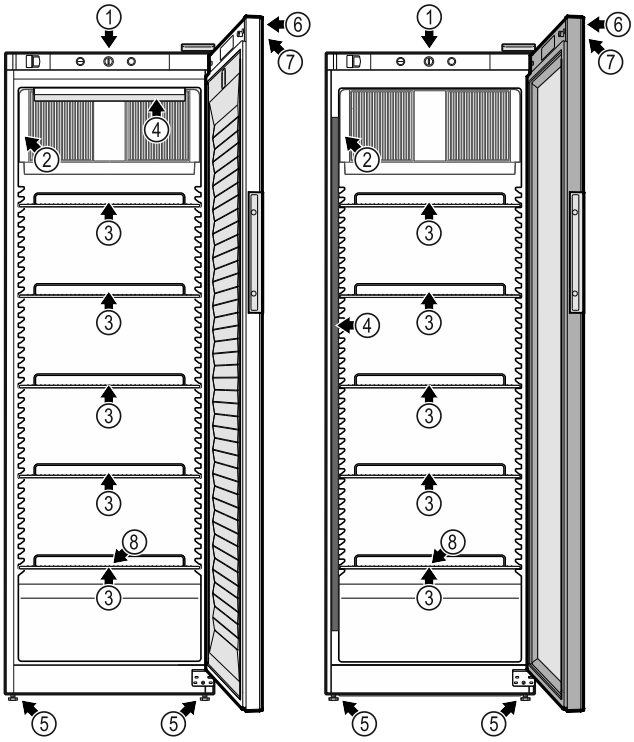

Fig. 1 Basic equipment

* Depending on model and options

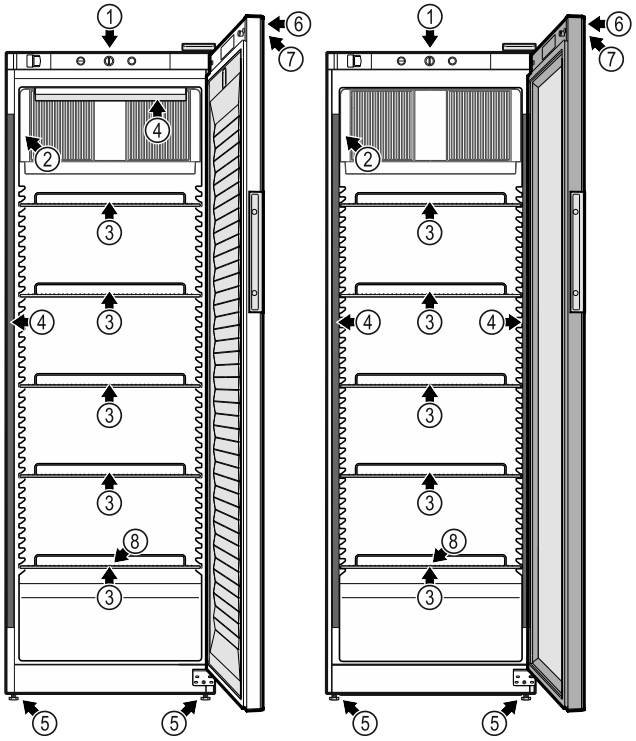

Fig. 2 Variants

Equipment

(1) Controls
(2) Thermometer
(2) Type plate
(3) Shelves
(4) Interior lighting*
(5) Adjustable foot
(6) Lock
(7) Temperature display
(8) Defrost water drain

2.3 Special features

Note
You can obtain accessories from customer service (see 9.3 Customer Service) or from specialised dealers via the dealer search on our service page on the Internet:

home.liebherr.com

2.4 Range of use of appliance

Intended use

This fridge is appropriate for professional use in the commercial environment and in retail. It may be used for the storage, presentation and sale of chilled packaged foodstuffs and beverages. It is appropriate for the removal of chilled goods by customers.

The appliance is only designed for use in closed rooms.

All other types of use are not permitted.

Foreseeable incorrect use

The following uses are expressly forbidden:

- Storage and refrigeration of:
  - Chemically unstable flammable or corrosive substances
  - Medicines, blood plasma, laboratory preparations or similar substances and products based on the Medical Device Directive 2007/47/EC
- Use in potentially explosive atmospheres
- Use outdoors or in areas exposed to dampness and splashing water

Improper use of the appliance will result in goods stored being damaged or spoiled.

Climate classes

The applicable climate class for your appliance is printed on the type plate.

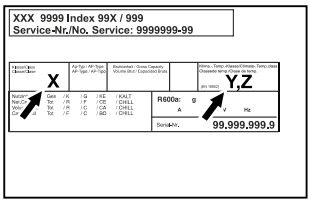

Fig. 3 Type plate

(X) The climate class states the ambient conditions in which the appliance can be operated safely.
(Y) The climate class defines the maximum parameters within which the appliance will function smoothly.
(Z) The temperature class indicates the temperature setting at which the appliance will function smoothly.

Climate class (X)	Max. room temperature	Max. rel. humidity
3	+25 °C	60 %
4	+30 °C	55 %
5	+40 °C	40 %
7	+35 °C	75 %

Note
The minimum permitted room temperature at the setup location is +10 °C.

At limit conditions, slight condensation may form on the glass door and on the side walls.

Climate class (Y)	Max. room temperature	Max. rel. humidity
CC1	+25.5 °C	60 %
CC2	+32.2 °C	65 %
CC3	+40.6 °C	75 %

Recommended temperature setting:	
Temperature class (Z)	**Temperature setting**
K1	+3.5 °C
K2	+2.5 °C
K3	-1 °C
K4	+5 °C
M1	+5 °C
M2	+7 °C

3 Setting up and connecting

3.1 Installation requirements

The installation conditions are crucial to ensure that you can operate your appliance safely, efficiently and without problems.

- Observe all safety instructions.
- Consider the location and position in the room.

WARNING
Danger of fire due to incorrect positioning!
If the mains cable or plug touches the back of the appliance, the vibration can damage the mains cable or the plug resulting in a short circuit.
▶ Make sure the mains cable is not trapped under the appliance when you position the appliance.
▶ Stand the appliance so that it is not touched by connectors or main cables.
▶ Do not connect any appliances to sockets in the area of the back of the appliance.
▶ Do **not** place and operate multi-sockets/power distributors and other electronic devices (such as halogen transformers) at the back of the appliances.

WARNING
Fire hazard due to dampness!
If live parts or the mains lead become damp this may cause short circuits.
▶ The appliance is designed for use in enclosed areas. Do not operate the appliance outdoors or in areas where it is exposed to splash water or damp conditions.

WARNING
Leaking coolant and oil!
Fire. The coolant contained in the appliance is eco-friendly, but also flammable. The oil contained in the appliance is flammable. Escaping coolant and oil can ignite if the concentration is high enough and in contact with an external heat source.
▶ Do not damage the pipelines of the coolant circuit and the compressor.

3.1.1 Installation site

- A dry and well-ventilated room is an optimum installation location.
- If the appliance is installed in a very damp environment, condensation may form on the appliance exterior. Always make sure there is good ventilation and aeration at the installation site.
- The more refrigerant there is in the appliance, the larger than room must be in which it is located. In rooms that are too small, a leak can product a flammable gas/air mixture. For every 8 g of refrigerant, the installation room must be at least 1 m^3 in size. Information on the refrigerant contained is given on the type plate inside the appliance.
- The floor on which the appliance stands must be horizontal and level.
- The site of use must be able to bear the weight of the device including the maximum load. (see 9.1 Technical specifications)

3.1.2 Position in space

- Do not place the appliance in direct sunlight or near radiators or similar sources of heat.
- Always position the appliance with the rear directly on the wall.
- Use in hazardous areas is not permitted.

3.2 Appliance dimensions

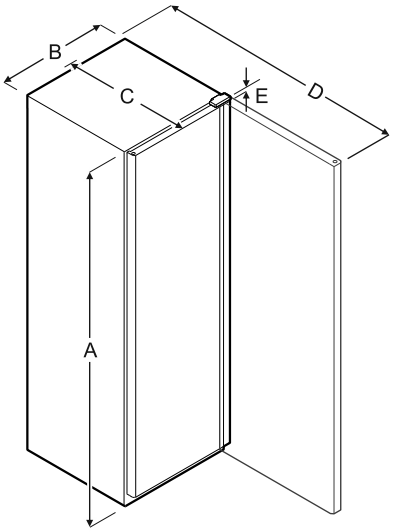

Fig. 4

Model	A	B	C	D	E
MRFvd 3501/3511	1684 mm	597 mm	654 mm	1203 mm	23 mm
MRFvd 4001/4011	1884 mm	597 mm	654 mm	1203 mm	23 mm
MRFvd 5501/5511	1684 mm	747 mm	769 mm	1468 mm	23 mm

A *= appliance height* ***B*** *= appliance width without handle* ***C*** *= appliance depth without handle* ***D*** *= appliance depth with door open* ***E*** *= hinge height*

3.3 Transporting the appliance

WARNING
Risk of injury due to broken glass!*
When transporting at an altitude of more than 1500 m, the glass panes of the door may break. This can result in sharp-edged fragments, which can cause serious injuries.
▶ Take appropriate protective action.

WARNING
Risk of injury and damage due to the appliance tipping over!
▶ Pay attention to uneven floors and ramps when transporting appliances.

3.3.1 Transporting the appliance for initial use

Ensure that the following requirements are met:
❑ The appliance is packaged.
❑ The appliance is upright.

▶ Transport the appliance with the help of two people.
▶ Unpacking the appliance.

3.3.2 Transporting the appliance after initial use

Observe the following instructions if you wish to transport or move the appliance again after initial use.

Ensure that the following requirements are met:
❑ The appliance is emptied.

- ❑ The appliance is upright.
- ❑ Appliance with door(s): Door is secured against accidental opening.
- ❑ Appliance with telescopic unit: The telescopic unit is secured against accidental opening.
- ❑ Appliance with adjustable feet: Adjustable feet are screwed in.

▶ Transport the appliance with the help of two people.

After transport:

▶ Unscrew the adjustable feet on the appliance.
▶ Align the appliance.

3.4 Unpacking appliance

▶ Check the appliance and the packaging for damage during transport. Contact the supplier immediately if you suspect any damage. Do not connect appliance to the power supply.
▶ Remove all packaging materials from the rear or the side walls of the fridge that may prevent proper installation or prevent air flow and ventilation.
▶ Take the mains cable from the rear of the appliance. Remove the cable retainer when you do so, otherwise there will be vibration noise.

3.5 Removing the transport lock

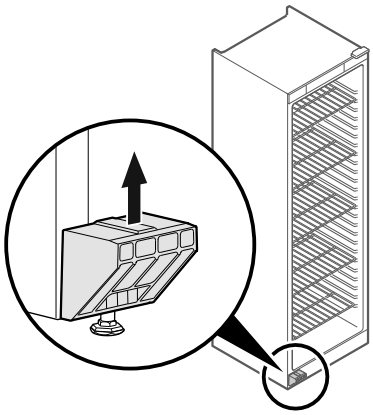

Fig. 5

▶ Pull the transport lock upwards.
▷ Base holder remains on the appliance.

3.6 Reversing the door hinge

Tools

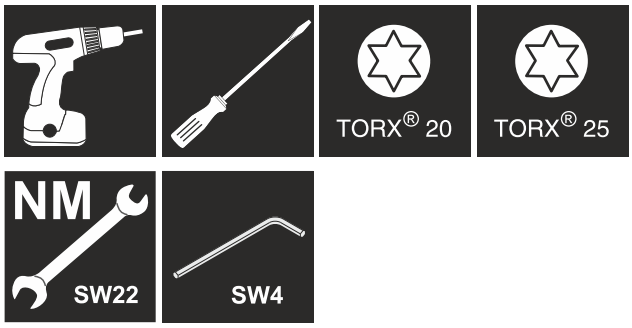

WARNING

Risk of injury if the door is not reversed correctly!

▶ Replace the door hinge with specialist personnel.

WARNING

Risk of injury and material damage due to heavy door!

▶ Only perform the conversion if you can carry a weight of 25 kg.
▶ Always have someone help you carry out the conversion.

NOTICE

Live parts!

Damage to electrical components.

▶ Remove the mains plug before you reverse the door.

▶ Open the door.

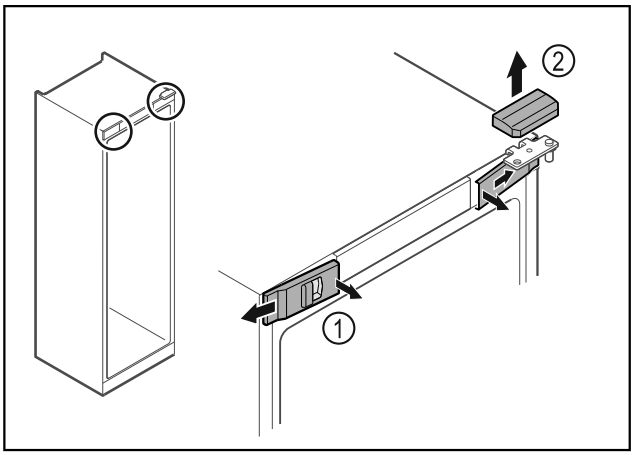

Fig. 6

▶ Unlatch the front covers *Fig. 6 (1)* on the inside and remove them sideways.
▶ Lift off the upper cover *Fig. 6 (2)*.

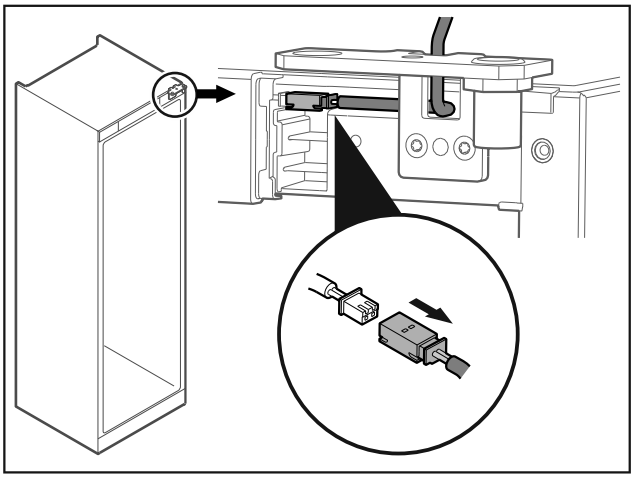

Fig. 7

▶ Disconnect the plug.

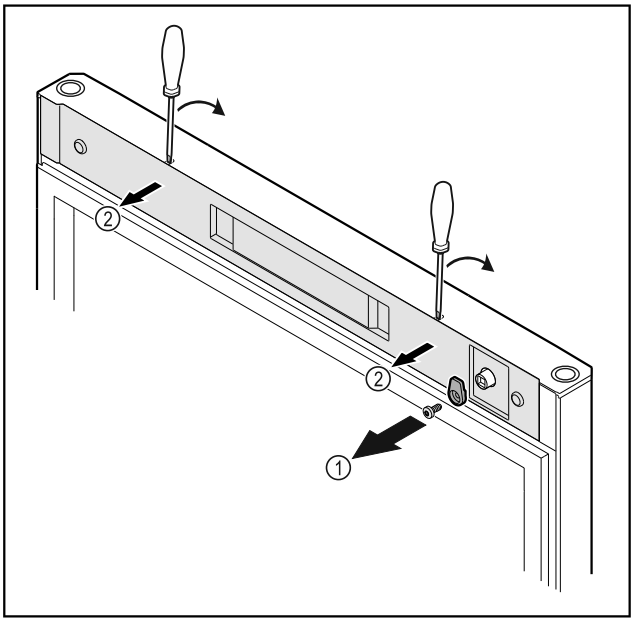

Fig. 8

▶ Unscrew the door latch *Fig. 8 (1)*.
▶ Unlatch the cover *Fig. 8 (2)* with a small screwdriver and remove it.

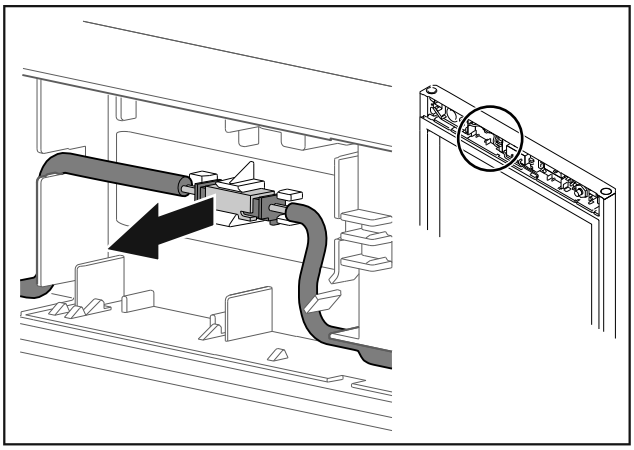

Fig. 9

▶ Detach the plug connection from the bracket.

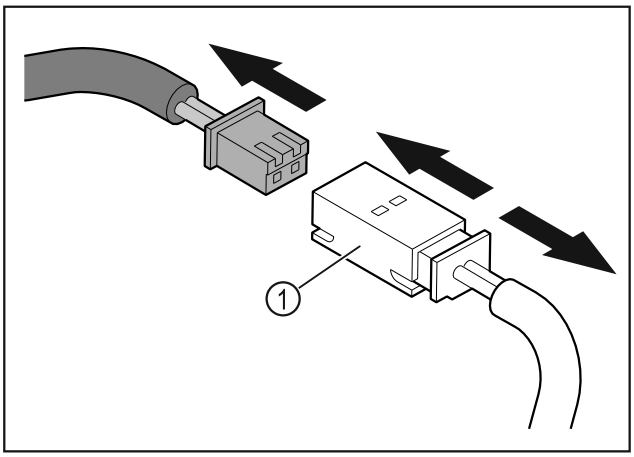

Fig. 10

▶ Disconnect the plug and the plug coupling *Fig. 10 (1)*.

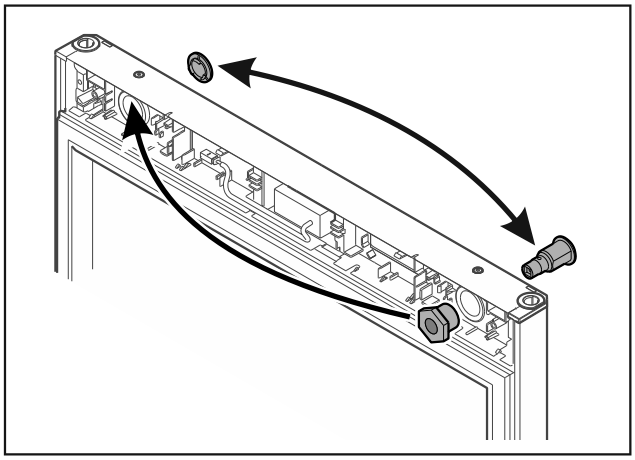

Fig. 11

▶ Put the lock and cover on the opposite side.

-or-

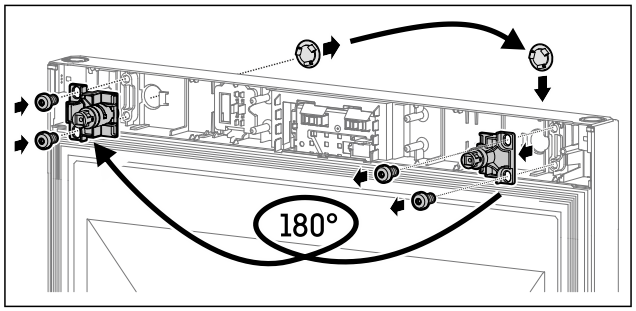

Fig. 12

▶ Put the lock and cover on the opposite side.

NOTICE

Risk of injury if the door tips out!

▶ Hold the door.

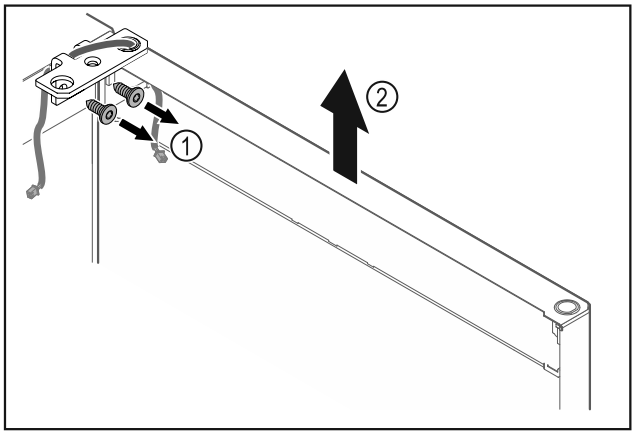

Fig. 13

▶ Unscrew the hinge *Fig. 13 (1)*.
▶ Lift the door with the hinge straight up by *Fig. 13 (2)* roughly 200 mm and take it off.
▶ Carefully place the door on a soft surface.

*** Depending on model and options**

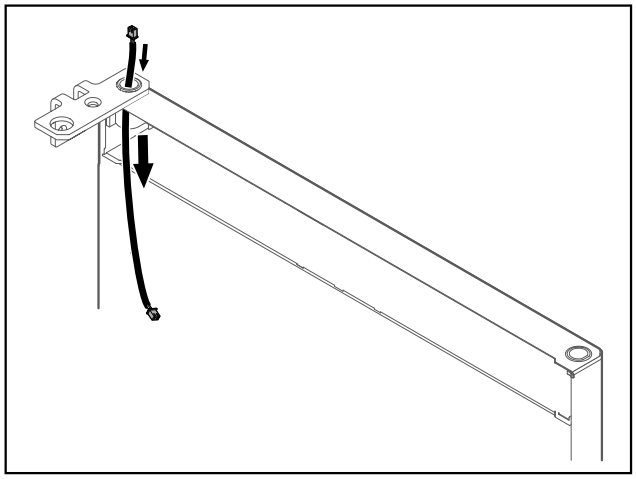

Fig. 14

▶ Carefully pull out the cable.

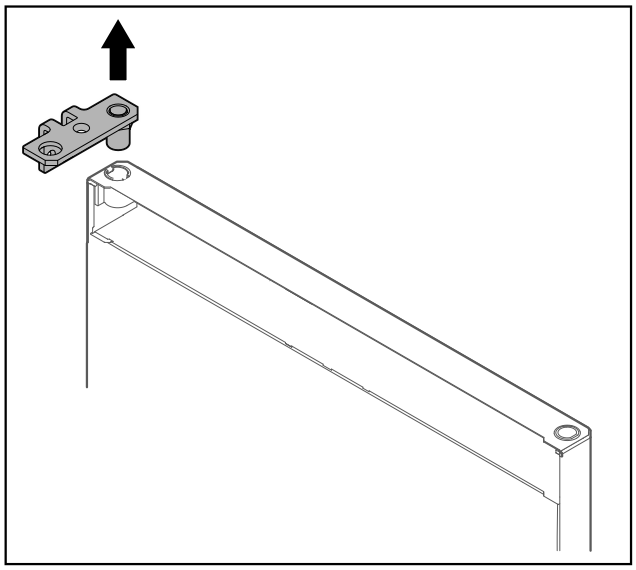

Fig. 15

▶ Pull out the hinge.

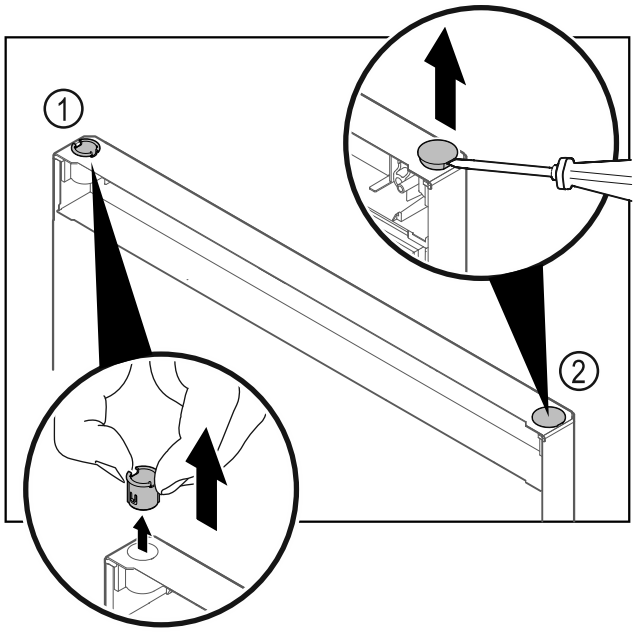

Fig. 16

▶ Pull out the hinge bushing *Fig. 16 (1)* with your fingers.

▶ Carefully lift the cover plug *Fig. 16 (2)* with a slotted screwdriver and pull it out.

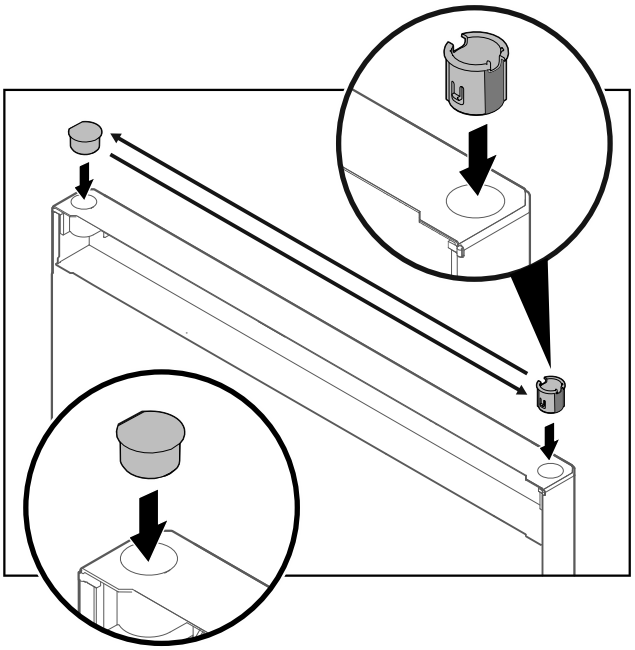

Fig. 17

▶ Insert hinge bushing and cover plug on the opposite side (the flattened sides face outwards).

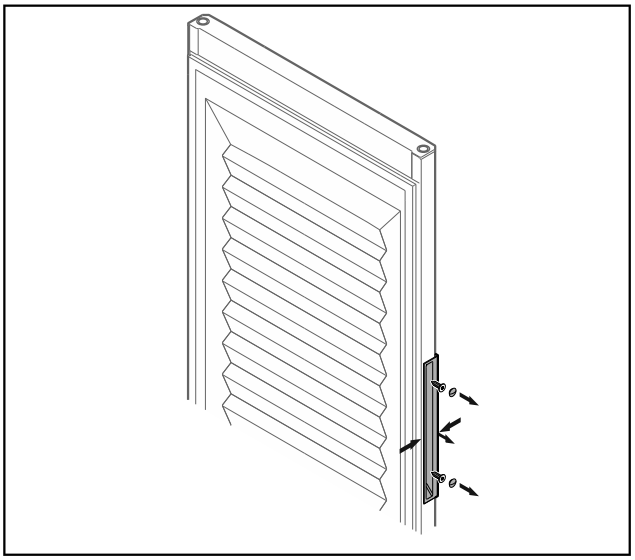

*Fig. 18 Insulated door**

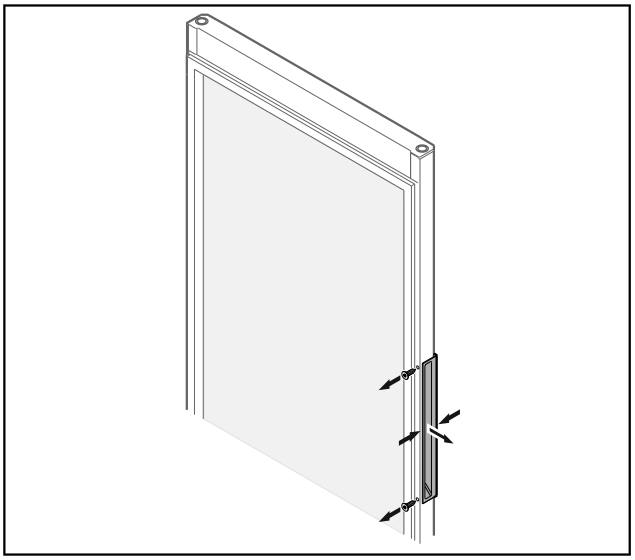

*Fig. 19 Glass door**

Note
▶ If the handle is difficult to detach from the door, slightly push the handle together when removing it.

▶ Unscrew the handle.

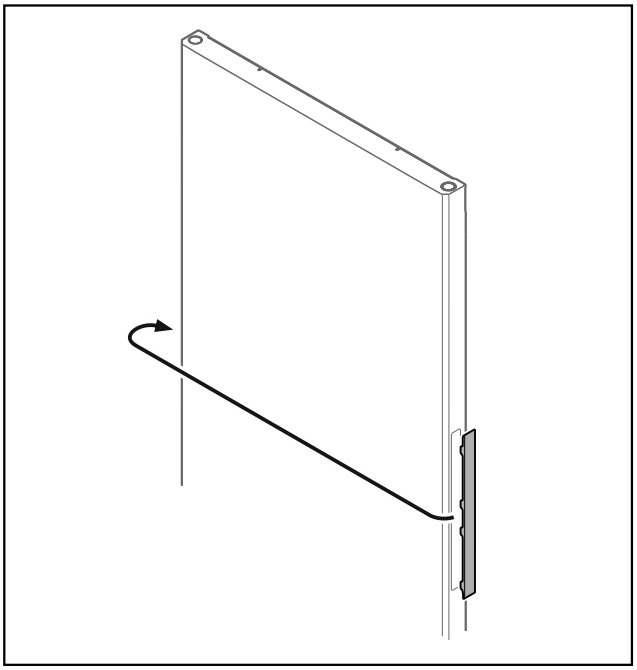

Fig. 20

Note
▶ If the cover is difficult to detach, carefully lever it out using a tool such as a screwdriver.

▶ Put the cover on the opposite side.

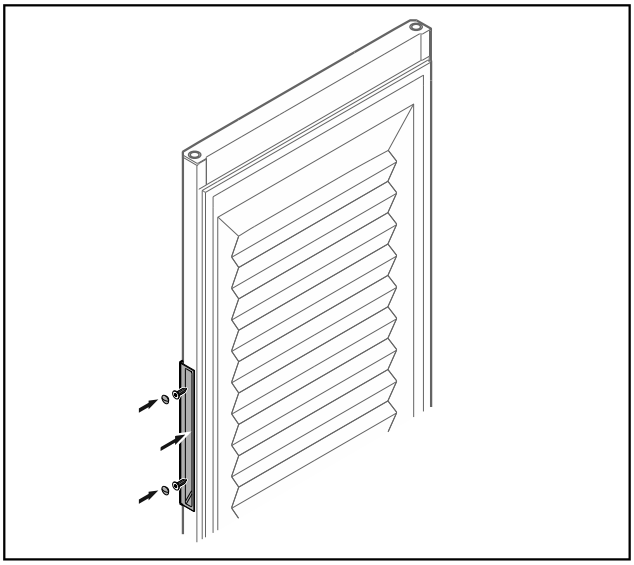

*Fig. 21 Insulated door**

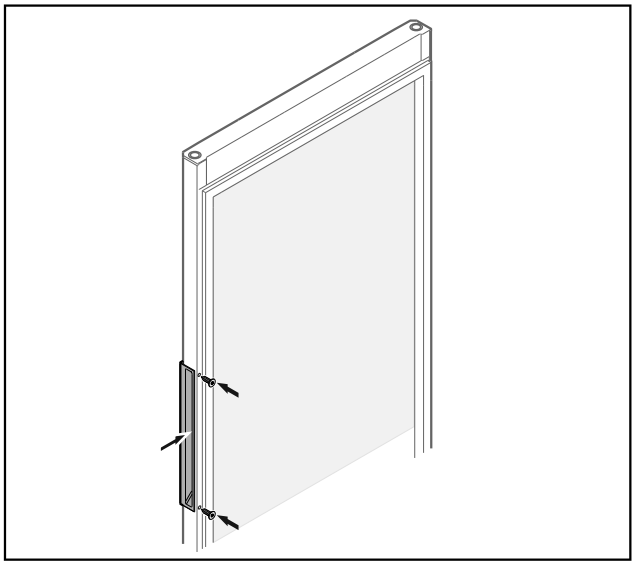

*Fig. 22 Glass door**

▶ Screw the handle onto the opposite side.

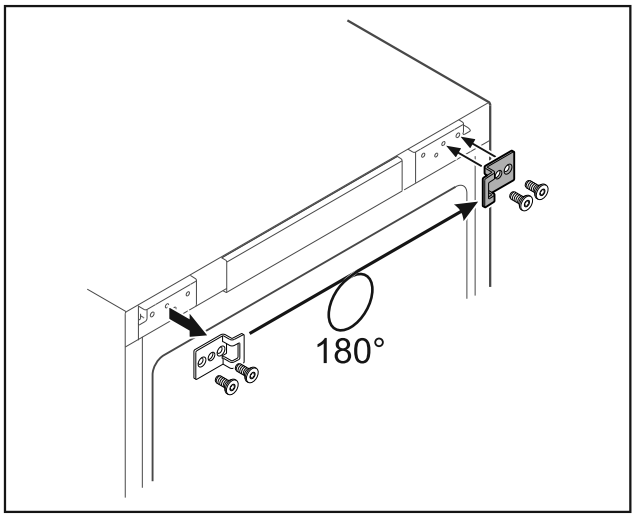

Fig. 23

▶ Put the closing bracket on the opposite side.

Note
The holes are pre-marked and must be pierced with the self-tapping screws.

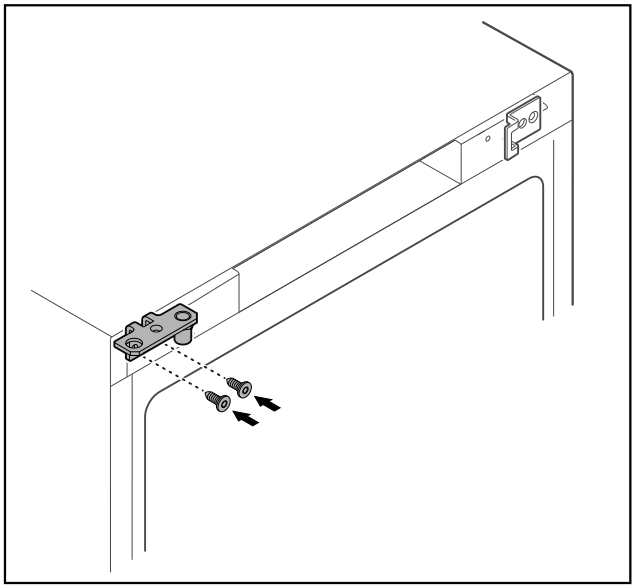

Fig. 24

▶ Move the hinge to the opposite side.

WARNING

Risk of injury and material damage if the door tips out!

▶ Tighten the bearing pins to the specified torque.

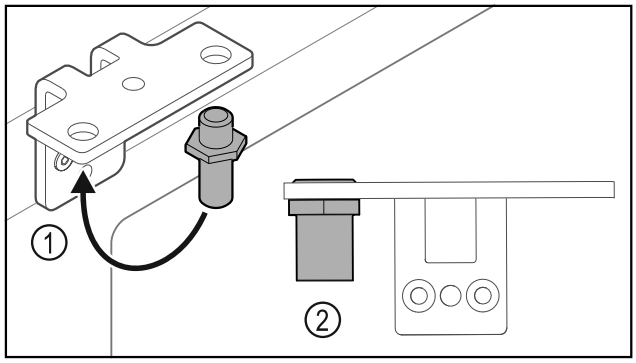

Fig. 25

▶ Put the pin back into the hinge *Fig. 25 (1)*.

▶ Tighten the pin *Fig. 25 (2)* to a **torque of 12 Nm**.

▶ Unscrew the hinge again.

NOTICE

Risk of injury due to tensioned spring!

▶ Do not disassemble the door closing system *Fig. 26 (1)*.

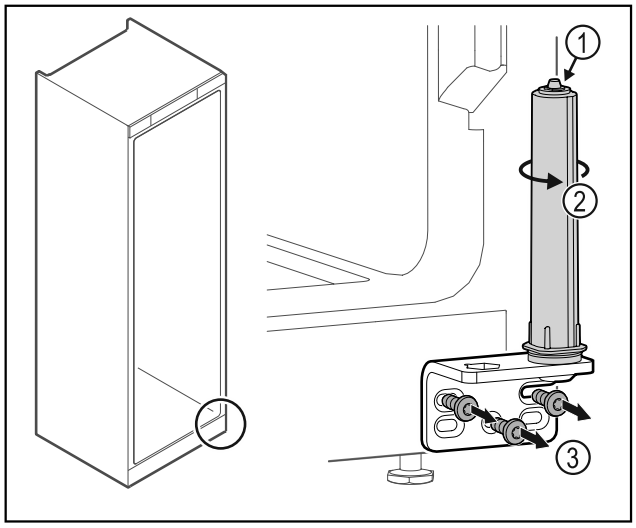

Fig. 26

▶ Turn the closing system *Fig. 26 (2)* until it clicks.

▷ The tension of the closing system is released.

▶ Unscrew the hinge *Fig. 26 (3)*.

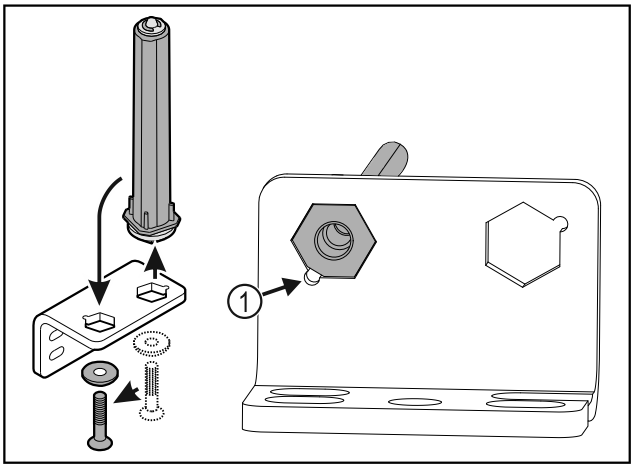

Fig. 27

▶ Put the door closing system in the hinge.

▶ Make sure the pin chamfer *Fig. 27 (1)* faces the round hole when you put it in.

-or-

Note

Incorrect positioning of the height adjustment discs.

It is no longer possible to secure the nut sufficiently.

▶ The washer must snap into place on the bottom of the locking system.

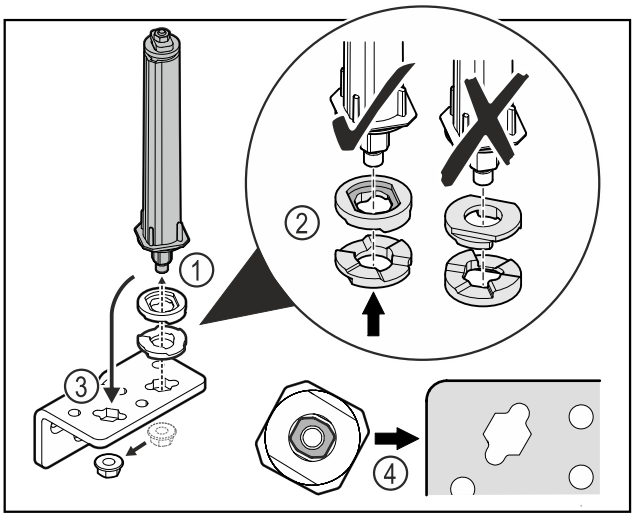

Fig. 28

▶ Loosen the nut and remove the door closing system *Fig. 28 (1)*.

▶ Ensure that the height adjustment discs are correctly aligned *Fig. 28 (2)*.

▶ Move the door closing system to the hinge angle and secure it with the nut *Fig. 28 (3)*.

▶ When inserting, ensure that the door closing system is correctly aligned *Fig. 28 (4)*.

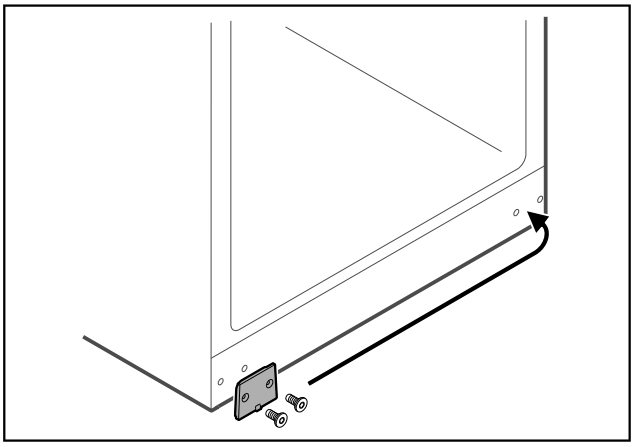

Fig. 29

▶ Put the cover plate on the opposite side.

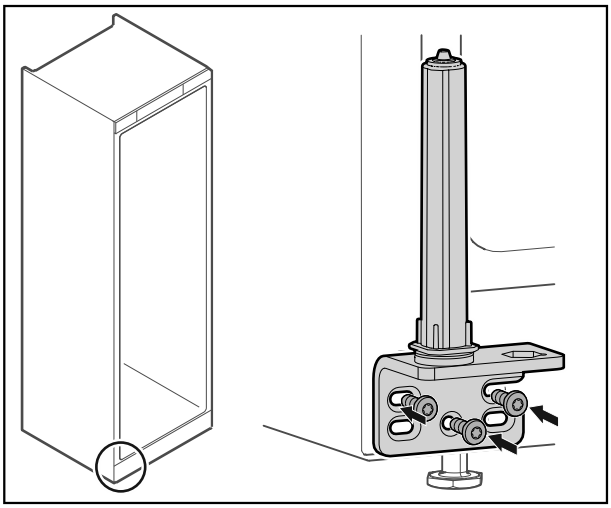

Fig. 30

▶ Screw the hinge onto the opposite side.

Note

Correct alignment and tension are important for the closing system to work properly.

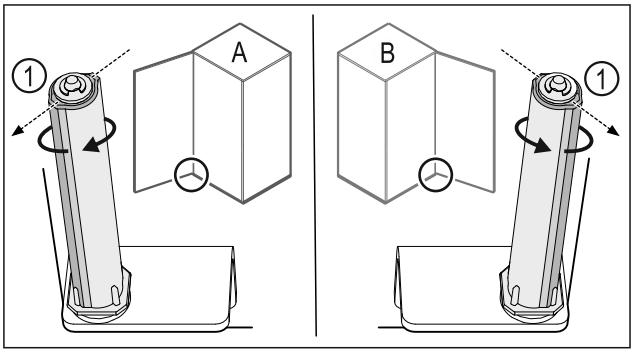

*Fig. 31 Left-hinged (**A**) / Right-hinged (**B**)*

▶ Turn the closing system against the resistance until the bar of the closing system *Fig. 31 (1)* points outwards.

▷ The closing system automatically stays in this position.

▷ The closing system is now aligned and tensioned.

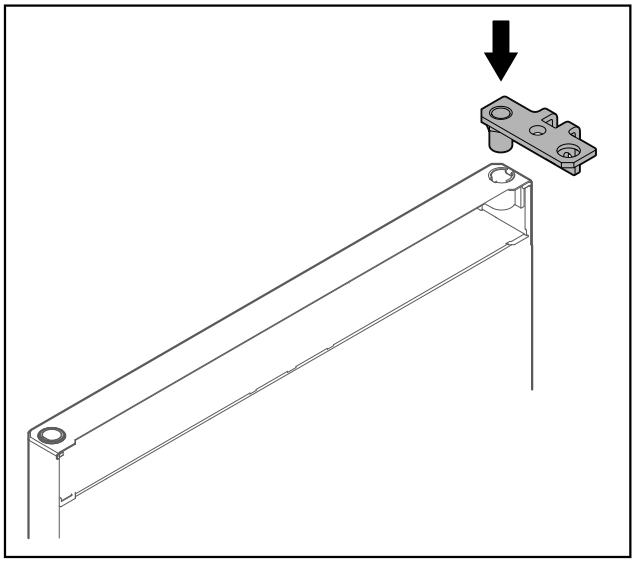

Fig. 32

▶ Put the hinge into the door.

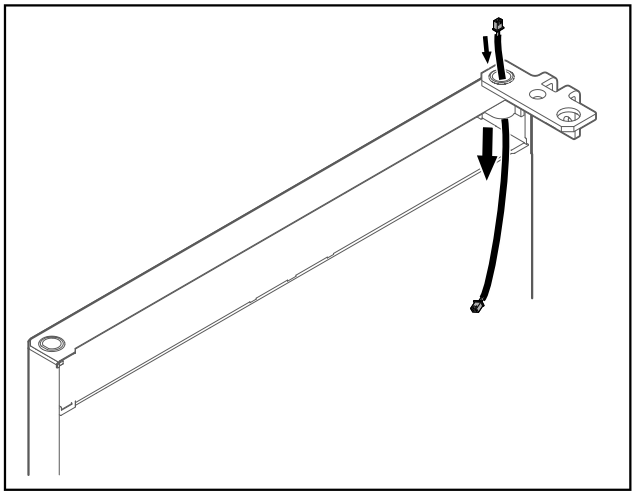

Fig. 33

▶ Carefully push the cable through.

NOTICE

Risk of injury if the door tips out!

▶ Hold the door.

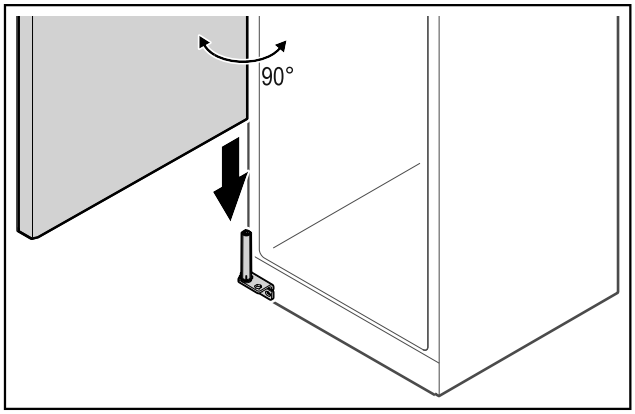

Fig. 34

▶ Together with a second person, lift the door from the ground.

▶ Carefully put the door on the closing system with the door opened at a 90° angle.

NOTICE
Material damage due to incorrect mounting!
▶ Do not pinch the cable when mounting the hinge.

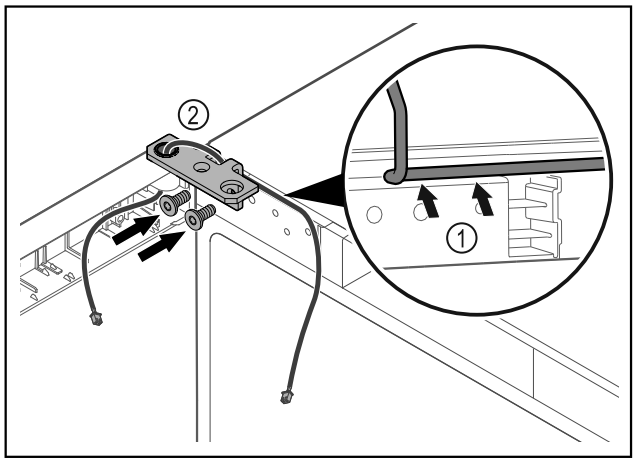

Fig. 35
▶ Feed the cable through the recess in the hinge and lay it carefully *Fig. 35 (1)*.
▶ Screw on the hinge *Fig. 35 (2)*.

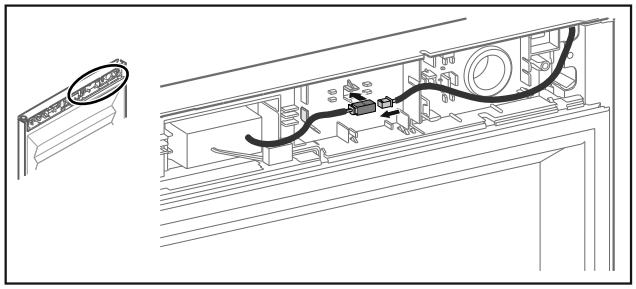

Fig. 36 Insulated door

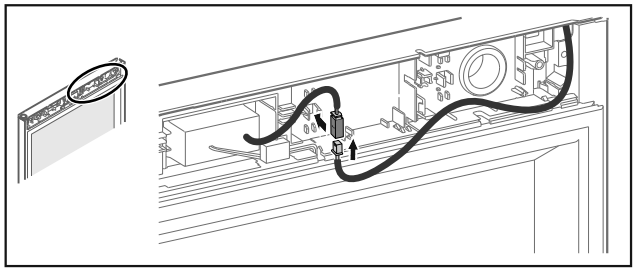

Fig. 37 Glass door
▶ Put the plug in the plug coupling and snap it into the plug holder.

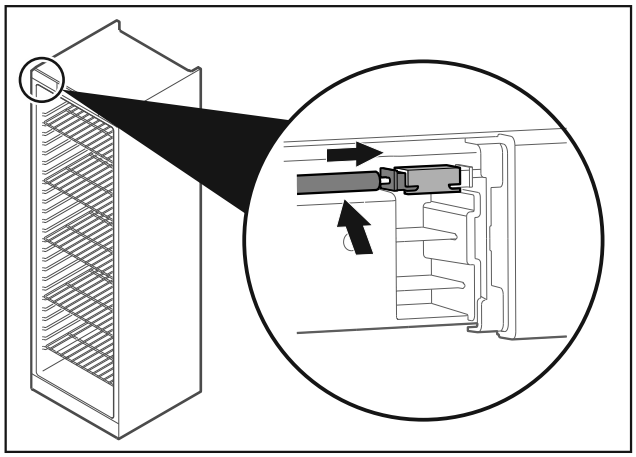

Fig. 38
▶ Insert the plug at the top left.

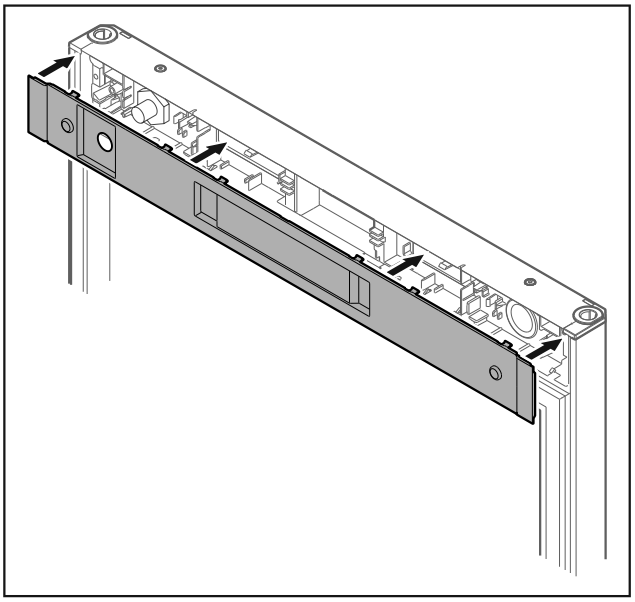

Fig. 39
▶ Put on the cover.

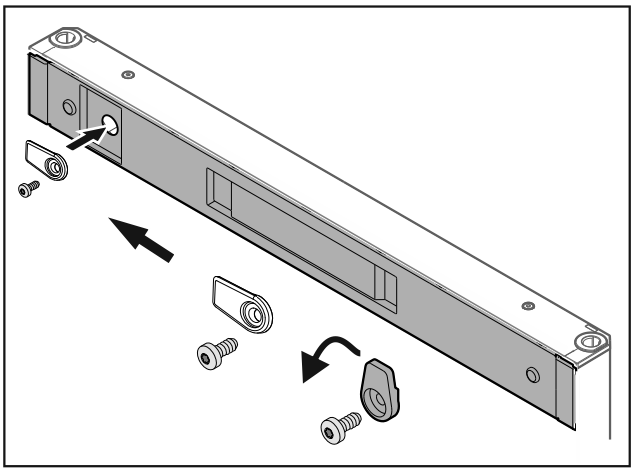

Fig. 40
▶ Screw on the door latch.

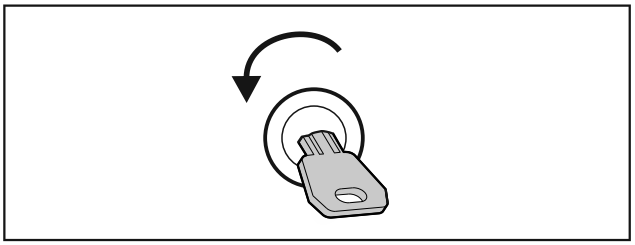

Fig. 41
▶ Open the door.

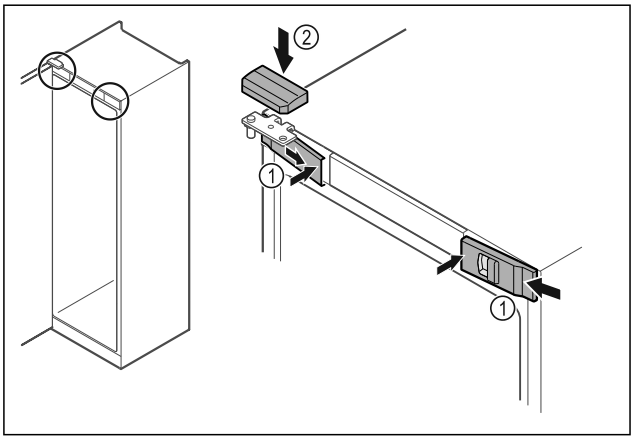

Fig. 42

▶ Hook in the front covers *Fig. 42 (1)* on the side and snap them into place on the inside.
▶ Snap on the top cover *Fig. 42 (2)* from above.
▶ Close the door.
▷ The door has now been reversed.

3.7 Aligning the door

If the door is not straight, you can adjust it on the lower hinge.

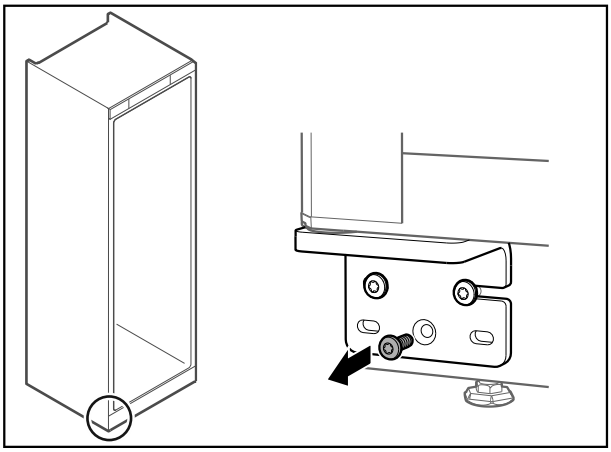

Fig. 43

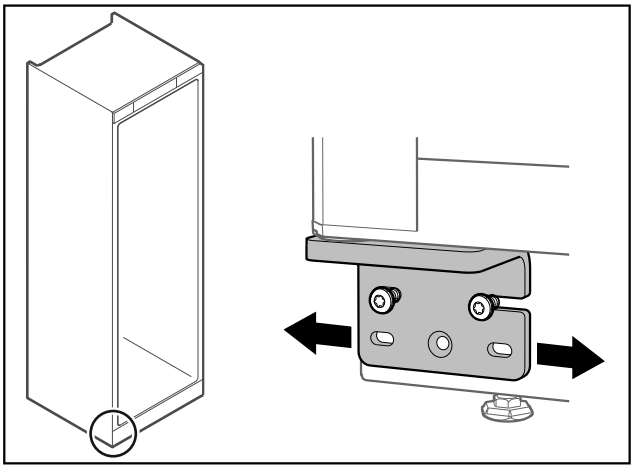

Fig. 44

▶ Slightly undo both screws and move the door with the hinge to the left or right.
▷ The door is now straight.

3.8 Installing appliance

CAUTION
Risk of injury and damage.
▶ Use 2 people to install appliance.

CAUTION
Risk of injury and damage.
The door can knock against the wall and become damaged as a result. In the case of glass doors, the damaged glass can cause injuries.
▶ Protect the door from knocking against the wall. Attach door stopper, e.g. felt stopper, to the wall.

▶ Connect all necessary components (e.g. mains cable) to the back of the appliance and route to the side.

Note
Cables can be damaged.
▶ Do not jam the cable when pushing the appliance back.

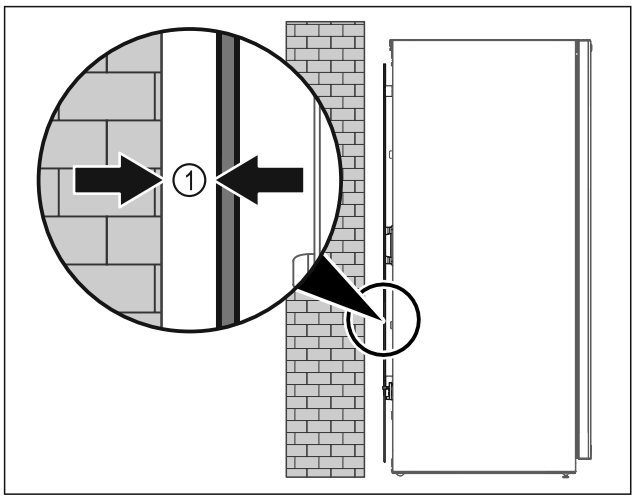

Fig. 45

▶ Set up the appliance either free-standing or directly against a wall at a minimum distance of 5 mm *Fig. 45 (1)*.

3.9 Setting up the appliance so it is level

NOTICE
Appliance body is deformed and door does not close.
▶ Align appliance horizontally and vertically.
▶ Compensate for uneven floors using adjustable feet.

WARNING
Incorrect height adjustment of the adjustable foot!
Can cause severe or even fatal injury. Incorrect height adjustment can cause the bottom part of the adjustable foot to come loose and the appliance to tip over.
▶ Do not unscrew the adjustable foot too far.

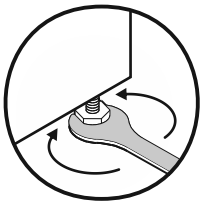

Fig. 46

Raising appliance:
▶ Turn adjustable foot clockwise.

Lowering appliance:
▶ Turn adjustable foot anticlockwise.

3.10 Installing multiple appliances

NOTICE
Risk of damage due to condensation between the side walls.
▶ Do not install the appliance directly next to another fridge.
▶ Install appliances with a space 3 cm between appliances.
▶ Only install multiple appliances of up to climate class CC2 temperatures (32.2 °C, 65% humidity) next to one another.
▶ At higher levels of humidity, increase space between appliances.

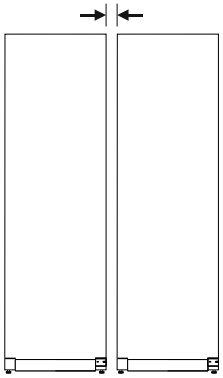

Fig. 47 Side-by-side installation

Note
A side-by-side kit is available as an accessory via Liebherr Customer Service. (see 9.3 Customer Service)

3.11 After installation

▶ Peel off the protective films. *
▶ Clean appliance. (see 8.2 Cleaning the appliance)
▶ Keep the invoice so you have the appliance and dealer information available if needed.

3.12 Disposing of packaging

WARNING
Danger of suffocation due to packing material and plastic film!
▶ Do not allow children to play with packing material.

The packaging is made of recyclable materials:
- corrugated board/cardboard
- expanded polystyrene parts
- polythene bags and sheets
- polypropylene straps
- nailed wooden frame with polyethylene panel*

▶ Take the packaging material to an official collecting point.

3.13 Connecting the appliance to the power supply

WARNING
Danger of electric shock and injury due to damaged appliance or damaged mains cable!
Danger of cuts and fatal injuries. If the appliance or the mains cable is damaged during transport, you may be electrocuted. You could also cut yourself on damaged parts of the appliance housing.
▶ Check the appliance and the mains cable for damage after transport.
▶ Never put the appliance into operation if the appliance or the mains cable are damaged.
▶ Contact Customer Service.

NOTICE
Risk of damage due to overloading the mains!
If you operate the appliance together with other large consumers (e.g. an oven) on the same mains, fluctuations may damage the appliance.
▶ Observe the requirements for the power supply. (⇨dynamic link)
▶ Only start the appliance up when the mains conditions are stable and it is earthed properly.

Connect your appliance to the mains using the power cable included. The power cable has a mains plug at the free end.

Make sure that the following requirements are fulfilled:
- The appliance and power cable are undamaged.
- The appliance is set up in accordance with the regulations. (see 3.8 Installing appliance)
- Requirements for the electrical connection are met.
- Dimensions for connection in accordance with regulations are known and observed.
- Mains voltage and frequency correspond to the specifications on the type plate.
- The socket is earthed according to the regulations and fused.
- The fuse tripping current is between 10 A and 16 A.
- The socket is easily accessible and is not behind the appliance.

WARNING
Danger of fire due to incorrect connection!
Burns.
Damage to the appliance.
▶ Do not use an extension cable.
▶ Do not use distributor blocks.

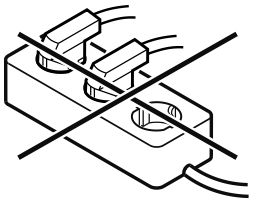

NOTICE
Danger of damage to incorrect connection!
Damage to the appliance.
▶ Do not connect the appliance to a stand-alone inverter, e.g. solar power systems and petrol generators.

▶ Connect the mains cable plug to the power supply. Ensure that the plug is tightly in the socket.

▷ The appliance is connected. For information regarding first use, see the following section or the operating instructions.

4 Putting into operation

4.1 Switching on appliance

Make sure that the following requirements are fulfilled:

- The appliance is set up and aligned and there is a suitable power socket.
- All adhesive strips, adhesive and protective films and transport locks are removed from inside and on the appliance.

▶ Plug in the power plug.
▷ The appliance is switched on once the temperature appears in the display.

5 Storage

5.1 Information regarding storage

Note
Failure to follow these guidelines can lead to food becoming spoiled.

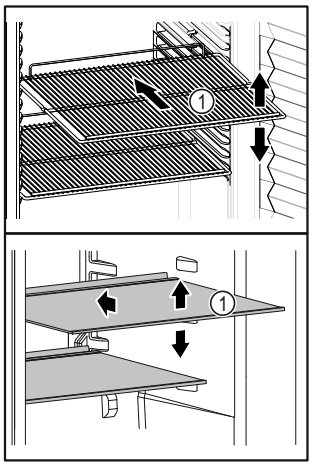

Fig. 48 Example illustration

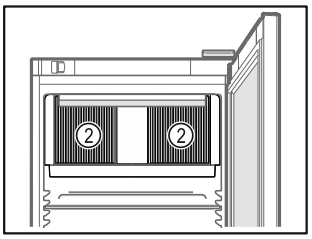

Fig. 49

When stocking observe the following:

- ❑ If storage surfaces *Fig. 48 (1)* are movable, adjust them according to height.
- ❑ Observe maximum load weight. (see 9.1 Technical specifications)
- ❑ Do not load appliance until storage temperature has been reached (maintain cold chain).
- ❑ Refrigerated goods must not touch the rear wall.
- ❑ Refrigerated items do not protrude beyond the shelves.
- ❑ Ensure items for refrigeration are well packaged.
- ❑ Pack items for refrigeration which easily acquire or emit an odour of flavour in closed containers or cover.
- ❑ Keep liquids in closed containers.
- ❑ Package raw meat or fish in clean, closed containers. This will prevent meat or fish from touching or dripping onto other food.
- ❑ Leave space when storing items for refrigeration to ensure good air circulation.

5.2 Storage times

The best-before date specified on the packaging should be used as the reference point for the storage time.

6 Controls

6.1 Control and display elements

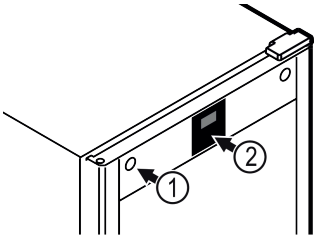

Fig. 50

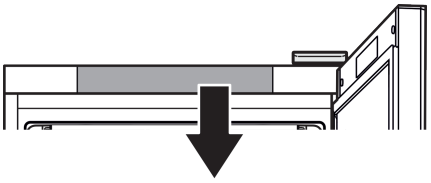

MRFvd 3501
MRFvd 4001
MRFvd 5501

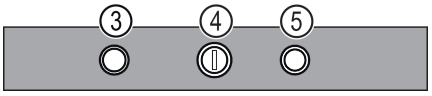

MRFvd 3511
MRFvd 4011
MRFvd 5511

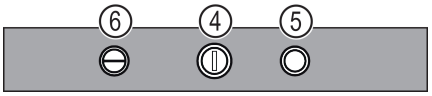

Fig. 50 (1) **Lock**
Fig. 50 (2) **Temperature display**
Fig. 50 (3) **Door contact switch for light**
Fig. 50 (4) **Temperature control**
Fig. 50 (5) **Door contact switch for fan**
Fig. 50 (6) **Light switch on/off**

6.2 Appliance functions

6.2.1 Temperature

The temperature depends on the following factors:

- How often the door is opened
- How long the door is open for
- The room temperature of the installation site
- The type, temperature and amount of refrigerated food

Note
The temperature may differ from the temperature displayed in some areas of the interior.

At the correct temperature, cooled produce will keep for longer. This avoids disposing of food unnecessarily.

Recommended temperature setting: see temperature class on the type plate. (see 2.4 Range of use of appliance)

Setting temperature

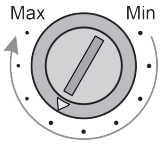

Fig. 51 Temperature adjustment knob

*** Depending on model and options**

- ▶ Set a lower temperature in the appliance: Turn the knob in the direction “Max”. Position “Max” is for the lowest interior appliance temperature.
- ▶ Set a higher temperature in the appliance: Turn the knob in the direction “Min”.

Calibrate the digital thermometer

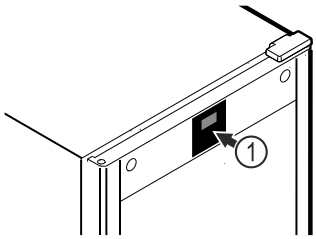

Fig. 52 Example illustration

The thermometer is calibrated at the factory (offset of +6 Kelvin). If the interior temperature differs from the temperature display *Fig. 52 (1)*, you can calibrate the thermometer.

Setting range: +/- 10 Kelvin in 1 Kelvin increments.

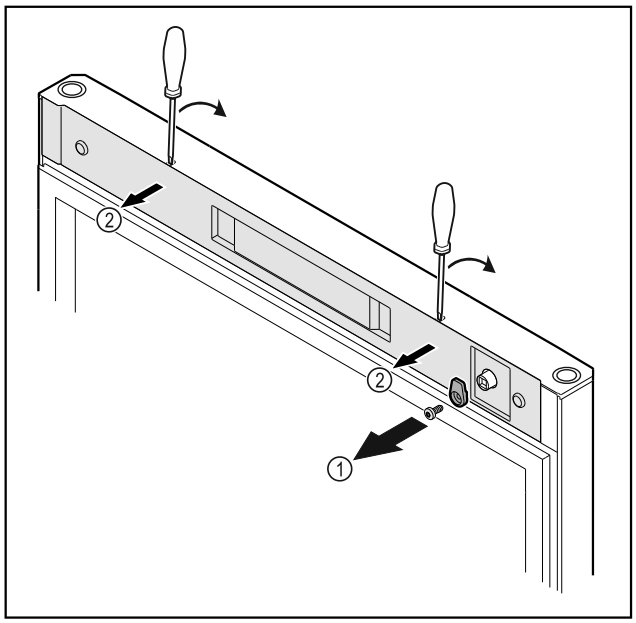

Fig. 53

- ▶ Unscrew the door latch *Fig. 53 (1)*.
- ▶ Unlatch the cover *Fig. 53 (2)* with a small screwdriver and remove it.

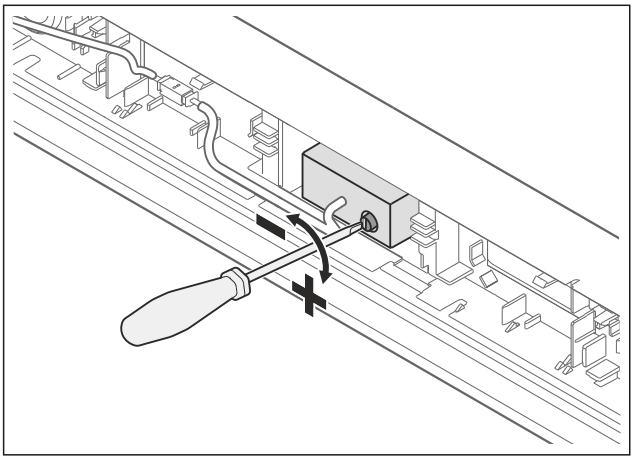

Fig. 54

- ▶ Adjust the offset with the adjusting screw.
- ▶ The set offset is briefly displayed on the display and then returns to the temperature display.

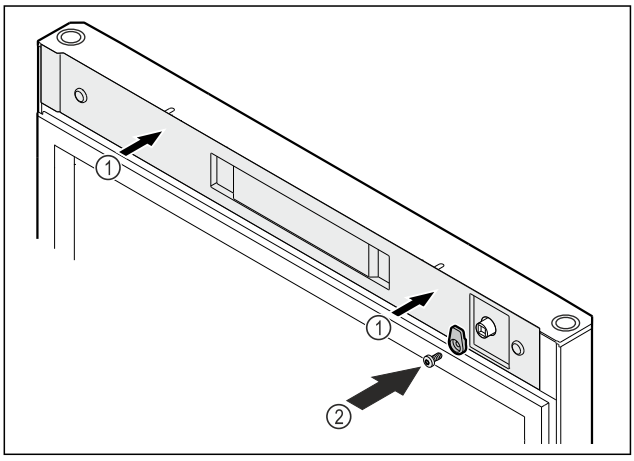

Fig. 55

- ▶ Set the cover back in place *Fig. 55 (1)*.
- ▶ Screw on the door latch *Fig. 55 (2)*.
- ▷ Digital thermometer is calibrated.
- ▷ The display shows the set temperature after approximately 2 minutes.

6.2.2 Lighting

The appliance is fitted with interior lighting.

The interior lighting always switches on when the door of the appliance is opened.

Switching the lighting on/off*

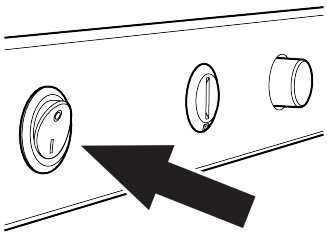

Fig. 56

- ▶ Press the light switch.
- ▷ The lighting is switched on/off.

7 Features

7.1 Safety lock

The lock in the appliance door is equipped with a safety mechanism.

7.1.1 Locking appliance

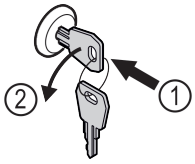

Fig. 57 Example illustration

- ▶ Insert key.
- ▶ Turn key anticlockwise by 90°.
- ▷ The appliance is locked.

7.1.2 Unlocking appliance

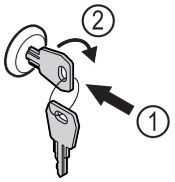

Fig. 58 Example illustration

▶ Insert key *Fig. 58 (1)*.
▶ Turn key clockwise by 90° *Fig. 58 (2)*.
▷ The appliance is unlocked.

8 Maintenance

8.1 Defrosting appliance

WARNING
Improper defrosting of the appliance!
Injuries and damage.
▶ Do not use mechanical equipment or other methods to speed up the defrosting process other than those recommended by the manufacturer.
▶ Do not use electrical heating or steam-cleaning appliances, naked flames or defroster sprays to defrost.
▶ Do not use sharp objects to remove ice.

Defrosting is performed automatically. The defrost water drains through the opening and evaporates.

To maintain the functionality of the appliance, we recommend defrosting it when there is a high buildup of ice. Icing in the interior is determined by the location (e.g. high humidity), settings on the appliance and incorrect user behaviour.

If automatic defrosting is insufficient, defrost the appliance manually:
▶ Switch off appliance.
▶ Pull out mains plug.
▶ Store refrigerated items elsewhere.
▶ Leave appliance door open during defrosting process.
▶ Soak up remaining defrost water with a cloth, clean drain opening and the appliance.

8.2 Cleaning the appliance

8.2.1 Preparing

WARNING
Short-circuit hazard due to live parts!
Electric shock or damage to the electronics.
▶ **Switch off the appliance.**
▶ Pull out mains plug or switch off fuse.

WARNING
Risk of fire
▶ Do not damage the refrigeration circuit.

▶ Empty the appliance.
▶ Pull out the mains plug.
▶ Observe the notes on transporting the appliance.

8.2.2 Cleaning housing

NOTICE
Improper cleaning!
Damage to the appliance.
▶ Only use soft cleaning cloths and ph-neutral all-purpose cleaners.
▶ Do not uses abrasive sponges or steel wool which may cause scratches.
▶ Do not use any sharp or abrasive cleaning agents, nor any that contain sand, chloride or acid.

WARNING
Risk of injury and damage as a result of hot steam!
Hot steam can lead to burns and can damage the surfaces.
▶ Do not use any steam cleaners!

NOTICE
Risk of damage due to short circuit.
▶ When cleaning the appliance, make sure no water gets into the electrical components.

▶ Wipe the housing down with soft, clean cloth. If very dirty, use lukewarm water with a neutral cleaner. Glass surfaces can also be cleaned with glass cleaner.
▶ Clean condenser coil each year. If the condenser coil is not cleaned, this significantly reduces the efficiency of the appliance.

8.2.3 Cleaning fan cover

NOTICE
Risk of damage due to short circuit.
▶ When cleaning the appliance, make sure no water gets into the electrical components.

NOTICE
Improper cleaning!
Damage to the appliance.
▶ Only use soft cleaning cloths and ph-neutral all-purpose cleaners.
▶ Do not uses abrasive sponges or steel wool which may cause scratches.
▶ Do not use any sharp or abrasive cleaning agents, nor any that contain sand, chloride or acid.

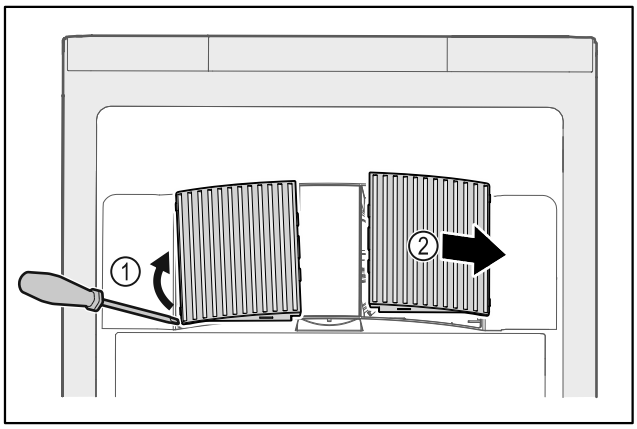

Fig. 59

▶ Carefully lever out fan covers from the side *Fig. 59 (1)* and remove towards the front *Fig. 59 (2)*.
▶ Rinse the air slots of the fan covers under running water. If very dirty, use lukewarm water with a neutral cleaner.
▶ Leave fan covers to air-dry completely.
▶ Reattach fan covers to the appliance.

8.2.4 Cleaning interior

WARNING
Short-circuit hazard due to live parts!
Electric shock or damage to the electronics.
▶ **Switch off the appliance.**
▶ Pull out mains plug or switch off fuse.

WARNING
Risk of injury and damage as a result of hot steam!
Hot steam can lead to burns and can damage the surfaces.
▶ Do not use any steam cleaners!

NOTICE
Improper cleaning!
Damage to the appliance.
▶ Only use soft cleaning cloths and ph-neutral all-purpose cleaners.
▶ Do not uses abrasive sponges or steel wool which may cause scratches.
▶ Do not use any sharp or abrasive cleaning agents, nor any that contain sand, chloride or acid.

Note
▶ Defrost water drain (see 2.2 Overview of appliances and equipment) : Remove deposits using a thin material (for example a cotton bud).

Note
Do not damage or remove the type plate on the inside of the appliance. The type plate is important for Customer Service. (see 9.3 Customer Service)

▶ Open the door.
▶ Empty the appliance.
▶ Clean interior and equipment parts with lukewarm water and a little detergent. Do not use any gritty or acidic cleaning agent or any chemical solvent.

8.2.5 After cleaning

▶ Wipe appliance and equipment parts dry.
▶ Connect and switch on appliance.
Once the temperature is sufficiently cold:
▶ put in items for refrigeration goods.
▶ Repeat cleaning regularly.
▶ Clean and remove dust from the refrigeration unit with heat exchanger once a year.

9 Customer help

9.1 Technical specifications

Temperature range	
Refrigeration	+1 °C to +15 °C

Maximum load per shelf [A)]			
Appliance width	550 mm	600 mm	750 mm
Grid shelves	--	45 kg	60 kg
Glass shelf	40 kg	40 kg	40 kg
Drawer (freezer appliances)	15 kg	15 kg	15 kg

[A)] Heavier loads may result in a slight bending of the shelves.

Net capacity
See net capacity on the type plate. (see 2.2 Overview of appliances and equipment)

Lighting	
Energy efficiency class [A)]	Light source
This product contains one or more energy efficiency class F light sources	LED

[A)] The appliance may contain light sources with different energy efficiency classes. The lowest energy efficiency class is indicated.

9.2 Technical fault

Your appliance is designed and built to ensure it works reliably and has a long service life. In the unlikely event that a fault occurs during operation, please check whether the fault is due to an operating error. If this is the case, you will be charged for the cost incurred even if this falls within the warranty period.

You can fix the following faults yourself.

9.2.1 Appliance function

Defect	Cause	Remedy
The appliance is not working.	→ The appliance is not switched on.	▶ Switch on the appliance.
	→ The mains plug is not properly plugged into the socket.	▶ Check the mains plug.
	→ There is something wrong with the fuse in the socket.	▶ Check fuse.
	→ Power cut	▶ Keep the appliance closed.
Temperature is not cold enough.	→ The appliance door is not closed properly.	▶ Close appliance door.
	→ Ventilation is not sufficient.	▶ Clear ventilation grille and clean it.
	→ The ambient temperature is too high.	▶ Ensure the correct ambient conditions: (see 2.4 Range of use of appliance)

Defect	Cause	Remedy
	→ The appliance was opened too many times or for too long.	▶ Wait to see if the appliance goes back to the required temperature by itself. If not, contact Customer Service. (see 9.3 Customer Service)
	→ The temperature is set incorrectly.	▶ Set a colder temperature and check after 24 hours.
	→ The appliance is too close to a heat source (oven, radiator, etc).	▶ Change where the appliance or the heat source are located.

9.3 Customer Service

First check whether you can remedy the fault yourself . If this is not the case, please contact Customer Service.

You can find the address in the enclosed brochure “Liebherr-Service” or at home.liebherr.com/service.

WARNING
Unprofessional repair!
Injuries.
- ▶ Have any repairs and action - not expressly specified - on the appliance and mains cable carried out by service personnel only. (see 8 Maintenance)
- ▶ A damaged mains cable may only be replaced by the manufacturer, the manufacturer’s Customer Service or a similarly qualified person.
- ▶ In the case of appliances with an IEC connector, the change may be made by the customer.

9.3.1 Contacting Customer Service

Make sure you have the following appliance data at the ready:

- ❑ Appliance name (model and index)
- ❑ Service no. (Service)
- ❑ Serial no. (S no.)

-or-

- ▶ Refer to the type plate for appliance information. (see 9.4 Type plate)

- ▶ Note down appliance information.
- ▶ Inform Customer Service: Report faults and the appliance information.
- ▷ This will help us to provide a fast and focussed service.
- ▶ Follow any further instructions provided by Customer Service.

9.4 Type plate

The type plate is inside the appliance. See appliance overview.

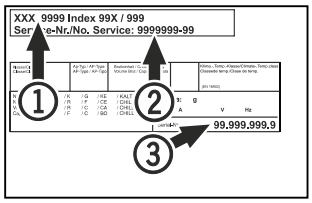

Fig. 60
(1) Appliance designation
(2) Service No.
(3) Serial No.

10 Shutting down

- ▶ Empty the appliance.
- ▶ Switch off the appliance.
- ▶ Pull the mains plug out of the socket.
- ▶ Clean appliance (see 8.2 Cleaning the appliance) .
- ▶ If present: Remove the covers and insulation from the sensor feed-through to prevent mould forming.
- ▶ Leave the door open so that no bad odours form.

Note
Damage to the appliance and malfunctions!
- ▶ After shutting down, only store the appliance at the permitted room temperature of between -10 °C and +50 °C.

11 Disposal

11.1 Preparing appliance for disposal

Liebherr uses batteries in some of its appliances. In the EU, for environmental reasons, legislation obliges the end user to remove these batteries before disposing of old appliances. If your appliance contains batteries, a corresponding notice is attached.

Lamps — If you can remove the lamps yourself without destroying them, also remove these before disposal.

- ▶ Take the appliance out of operation.
- ▶ If possible: remove lamps without destroying them.

11.2 Disposing of the appliance in an environmentally friendly manner

The appliance still contains valuable materials and must be disposed of separately from unsorted municipal waste.

Dispose of batteries separately from the old appliance. To do this, you can return the batteries free of charge to retailers as well as recycling centres and collection centres for recyclable materials.

Lamps — Dispose of removed lamps via the respective collection systems.

For Germany:	You can dispose of the appliance free of charge via the class 1 collection containers at the local recycling and recyclable material collection centres. When purchasing a new fridge/freezer, if the sales area > 400 m^2, retailers will also take back the old appliance free of charge.

WARNING
Leaking coolant and oil!
Fire. The coolant contained in the appliance is eco-friendly, but also flammable. The oil contained in the appliance is flammable. Escaping coolant and oil can ignite if the concentration is high enough and in contact with an external heat source.
- ▶ Do not damage the pipelines of the coolant circuit and the compressor.

- ▶ Observe the notes on transporting the appliance.
- ▶ Transport the appliance without damaging it.
- ▶ Dispose of batteries, lamps and the appliance according to the above specifications.

12 Additional information

Further information on warranty conditions can be found in the enclosed service brochure or on the Internet at https://home.liebherr.com.

Scan QR Code and find digital operating and installation instructions.

home.liebherr.com

20260325 7083957-00

Liebherr-Hausgeräte Ochsenhausen GmbH
Memminger Straße 77-79
88416 Ochsenhausen
Deutschland